Porches

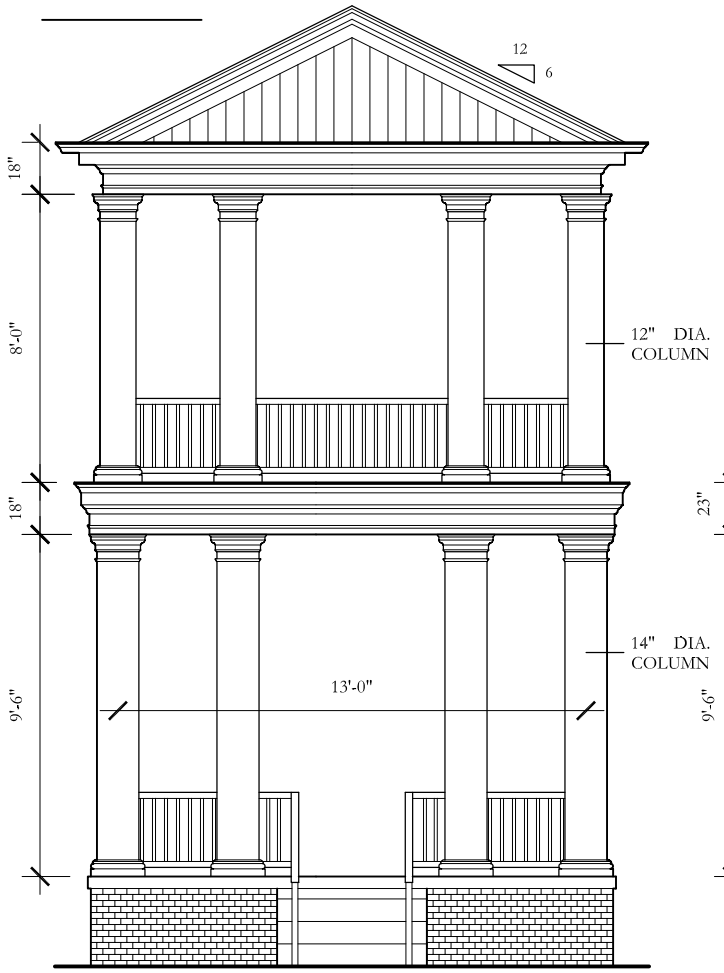

TEMPLE FRONT PORTICO

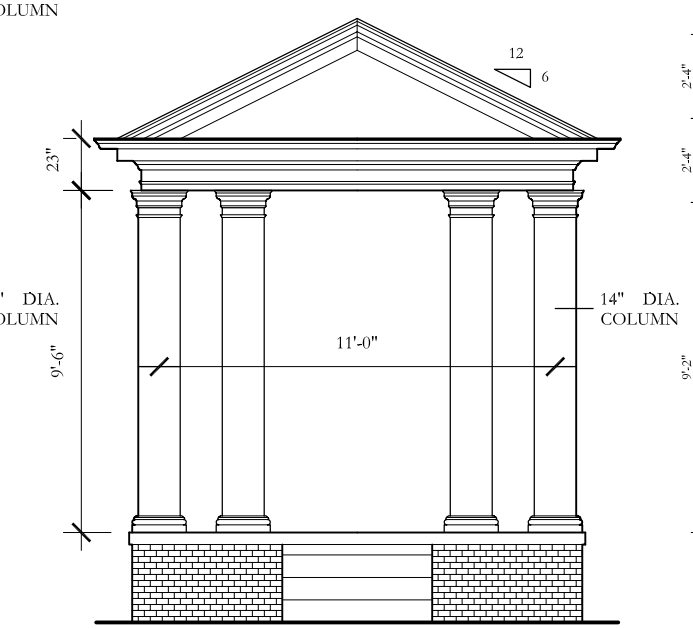

TWIN COLUMN PORTICO

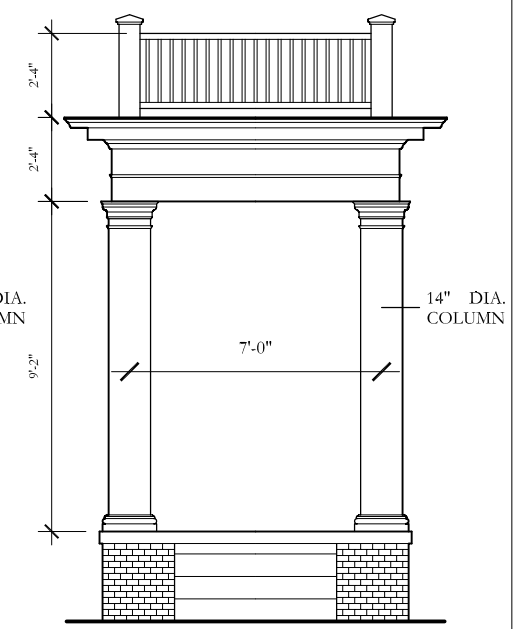

SINGLE COLUMN PORTICO

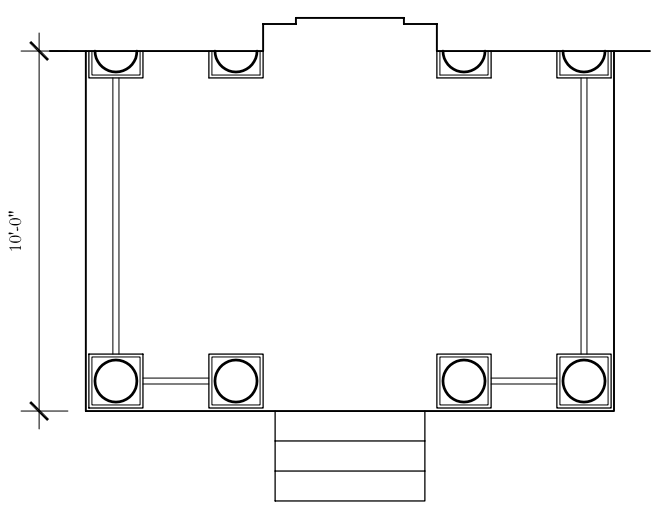

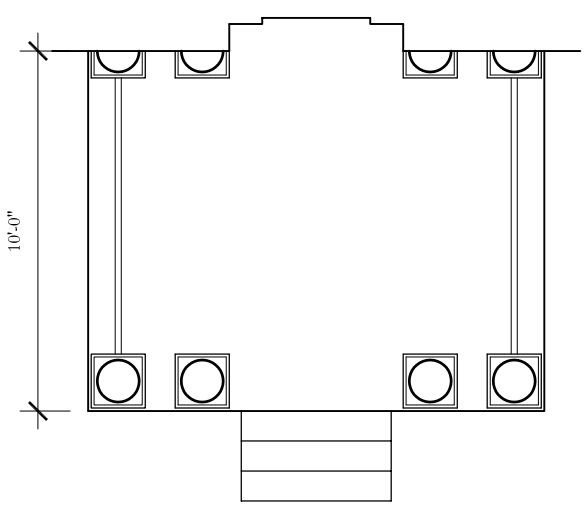

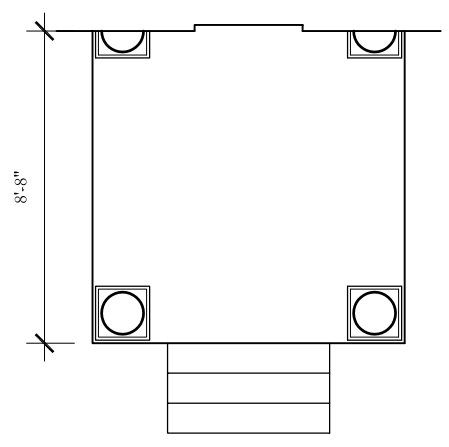

Porch Details

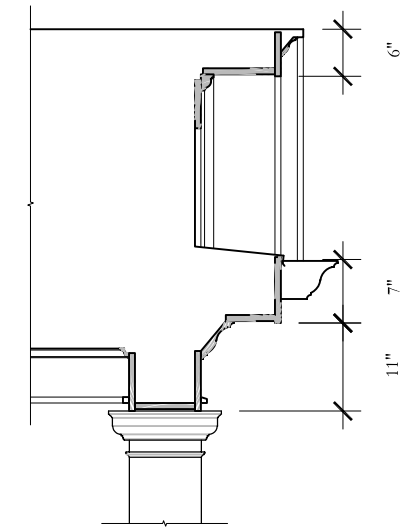

TEMPLE FRONT PORTICO DETAIL

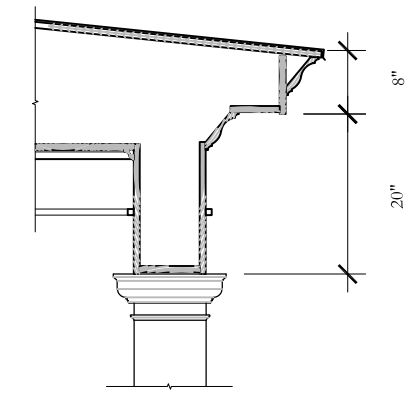

SINGLE COLUMN PORTICO DETAIL

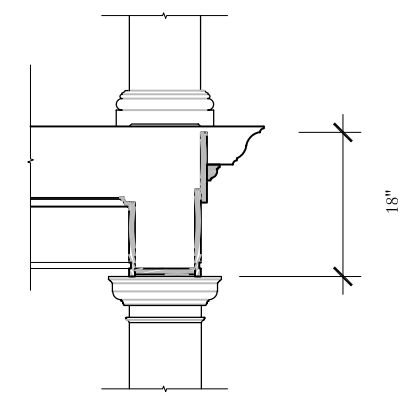

TWIN COLUMN PORTICO DETAIL

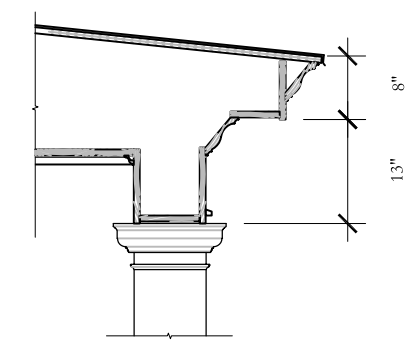

ACADIA PLANTATION

ACADIA PLANTATION DESIGN CODE

THIBODAUX, LOUISIANA

03029

CLASSICAL HISTORICAL DETAILS

© COPYRIGHT 2004 - ARCHITECTS SOUTHWEST

ACADIA PLANTATION

11.08.04